4. Electrical Component Location

A: LOCATION

1. ENGINE

Control module

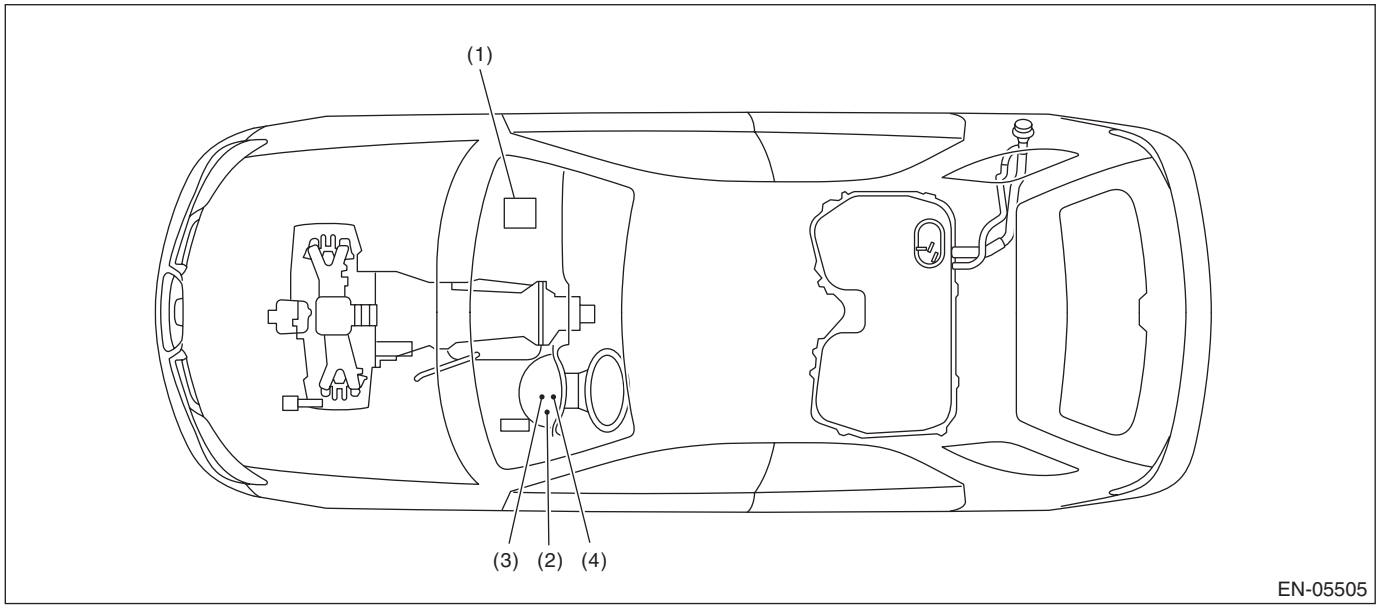

(1) Engine control module (ECM)
(2) Malfunction indicator light
(3) Test mode connector
(4) Data link connector

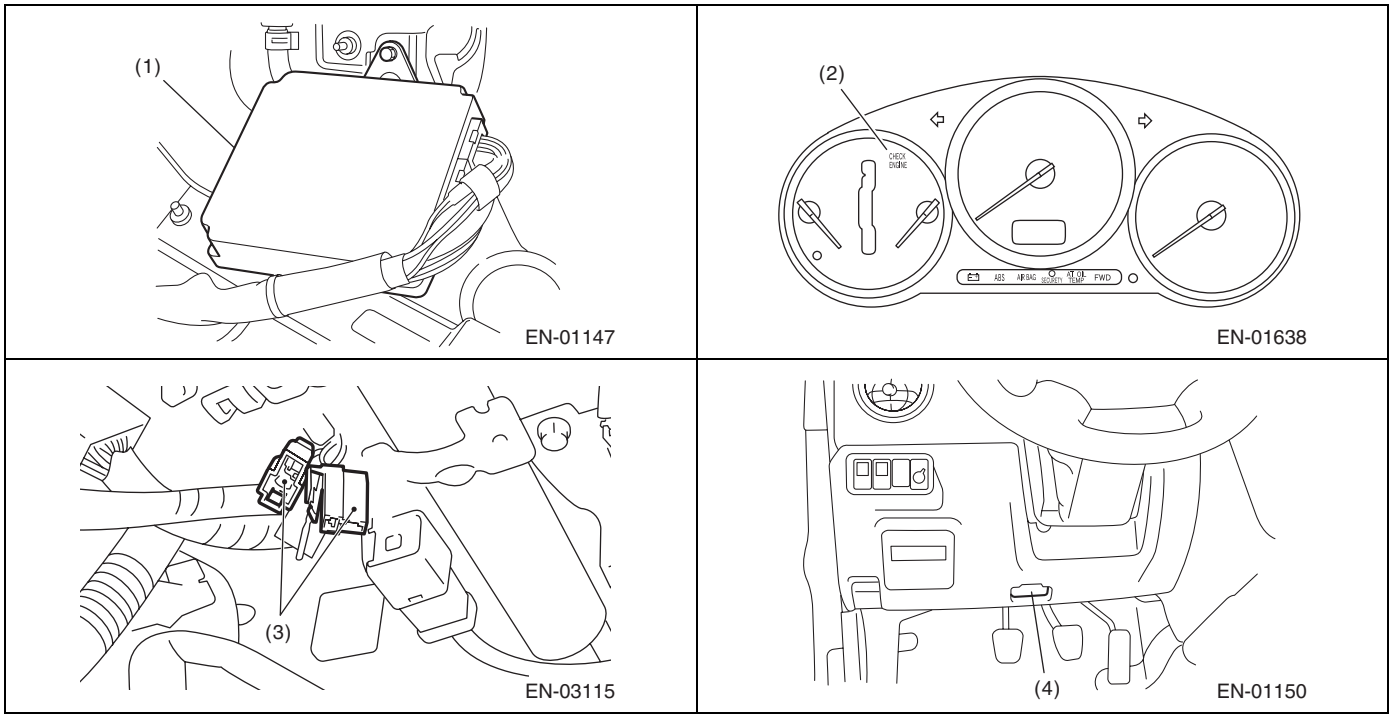

Sensor

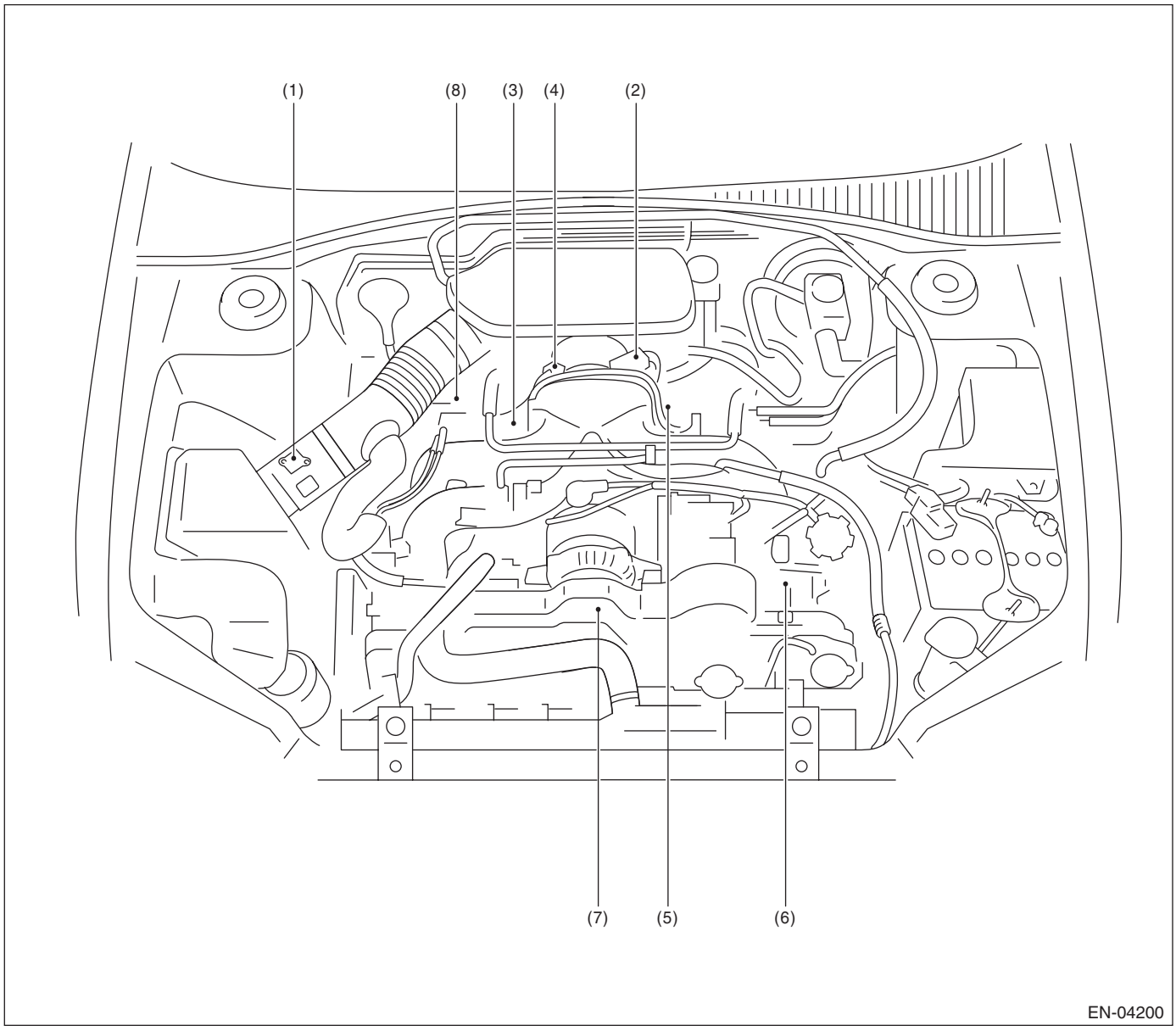

(1) Mass air flow and intake air temperature sensor
(2) Manifold absolute pressure sensor
(3) Engine coolant temperature sensor
(4) Throttle position sensor
(5) Knock sensor
(6) Camshaft position sensor
(7) Crankshaft position sensor
(8) Oil temperature sensor

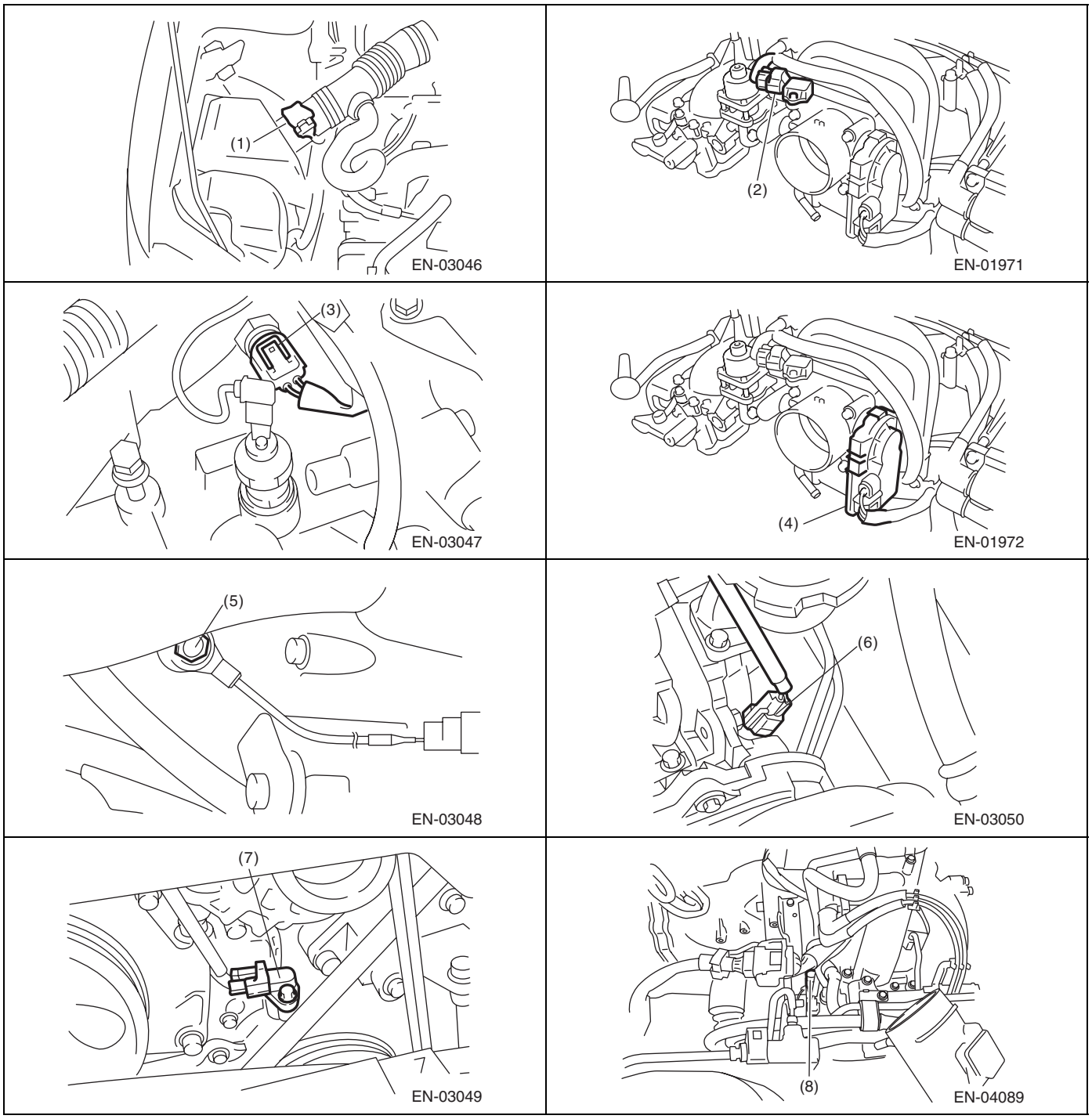
(1)
EN-03046
(2)
EN-01971
(3)
EN-03047
(4)
EN-01972
(5)
EN-03048
(6)
EN-03050
(7)
EN-03049
(8)
EN-04089

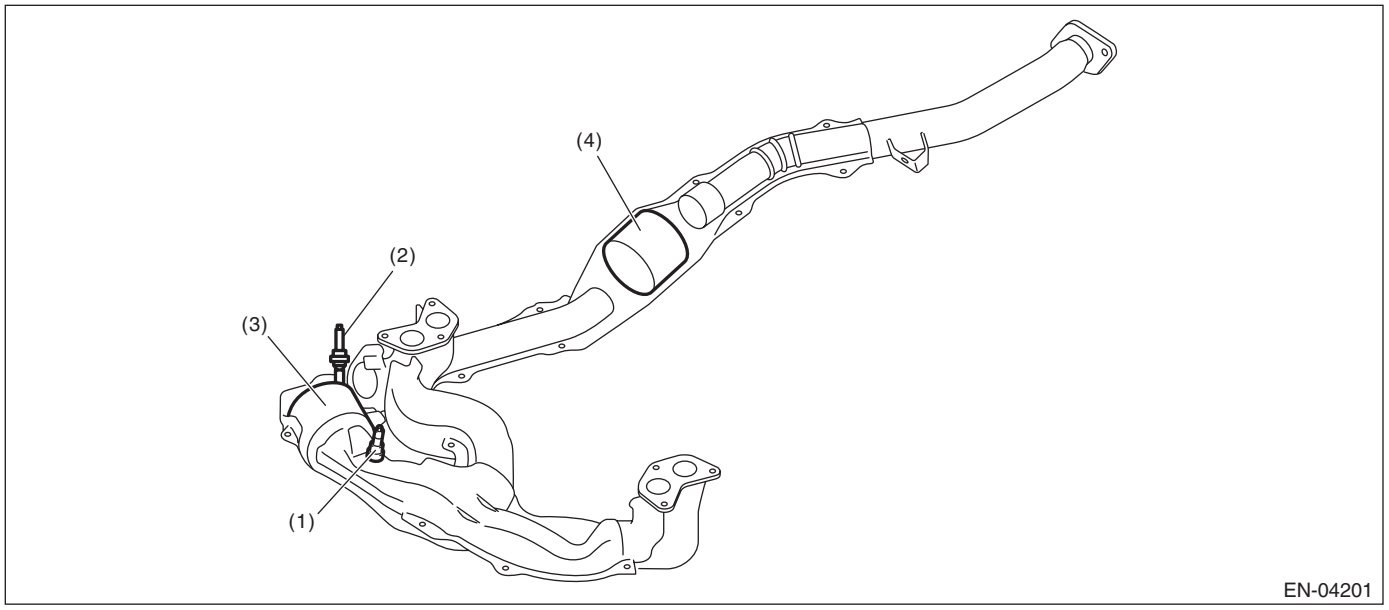

(1) Front oxygen (A/F) sensor
(2) Rear oxygen sensor
(3) Front catalytic converter
(4) Rear catalytic converter

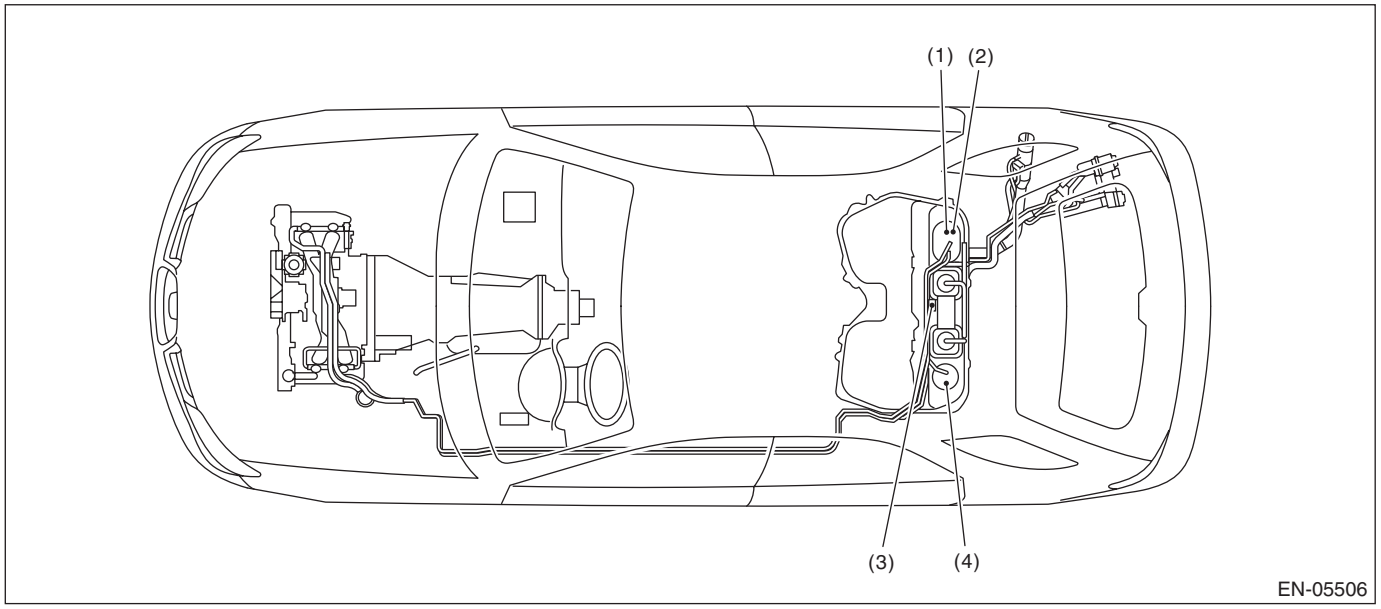

(1) Fuel level sensor
(2) Fuel temperature sensor
(3) Fuel tank pressure sensor
(4) Fuel sub level sensor

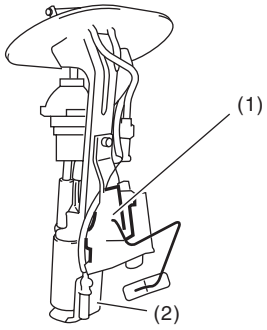

EN-03852

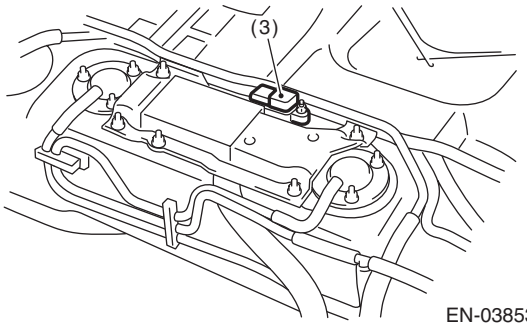

EN-03853

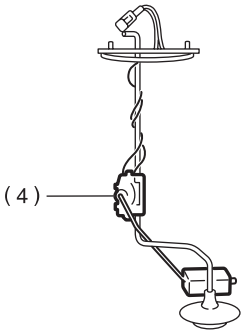

EN-00168

Solenoid valve, emission control system parts, ignition system parts

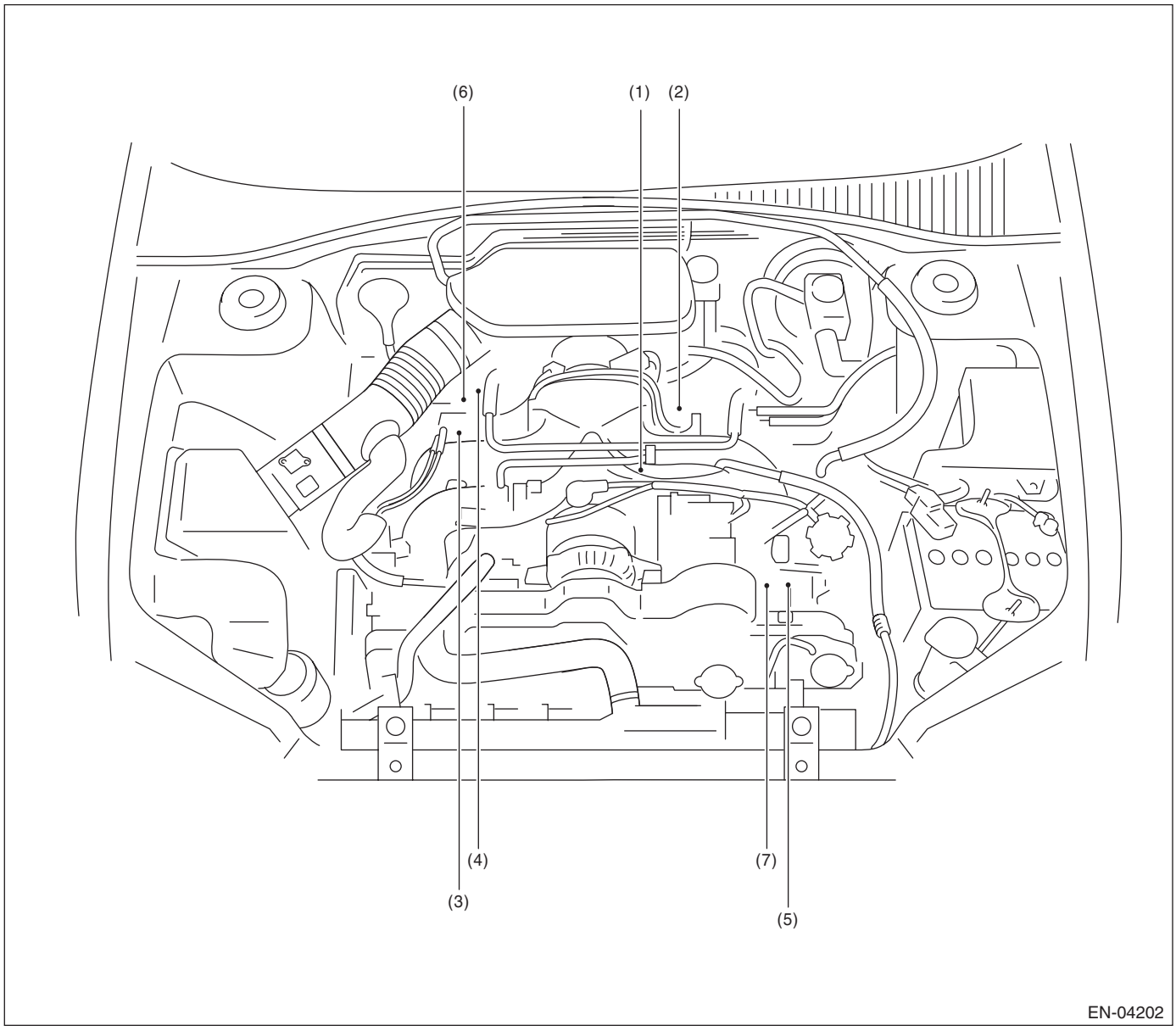

(1) Purge control solenoid valve
(2) EGR valve
(3) Ignition coil and ignitor ASSY
(4) Oil switching solenoid valve RH
(5) Oil switching solenoid valve LH
(6) Variable valve lift diagnosis oil pressure switch RH
(7) Variable valve lift diagnosis oil pressure switch LH

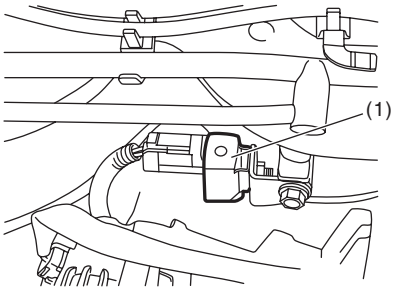

EN-03052

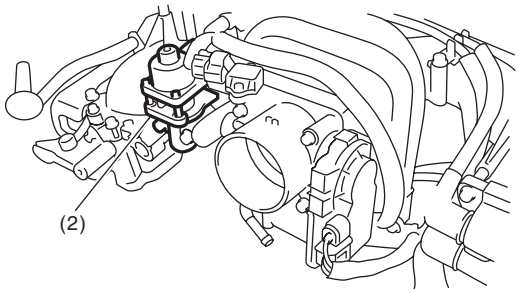

EN-01976

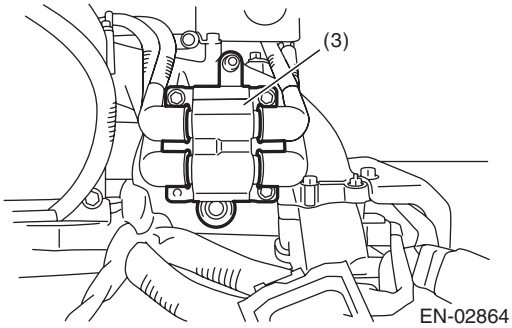

EN-02864

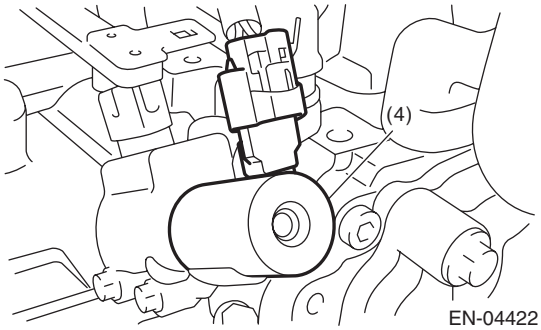

EN-04422

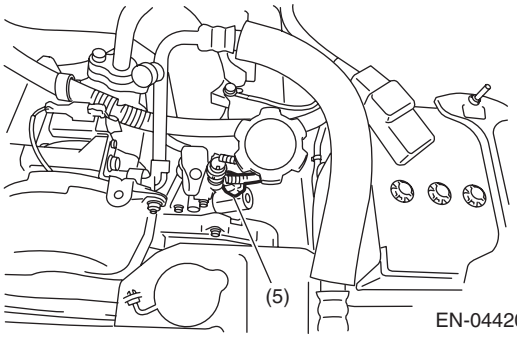

EN-04420

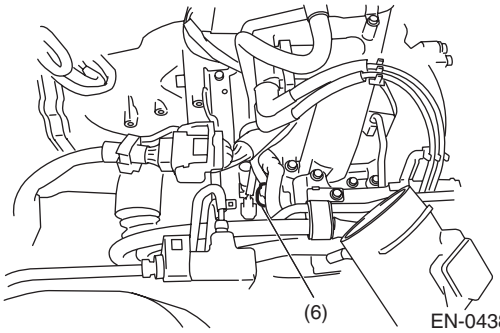

EN-04384

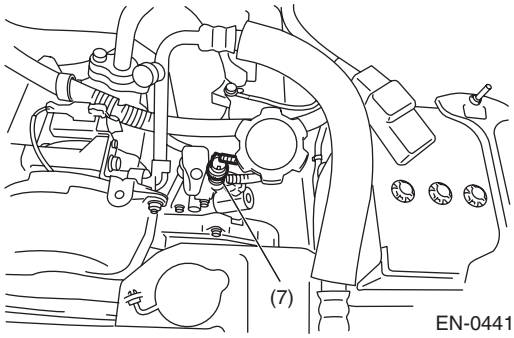

EN-04419

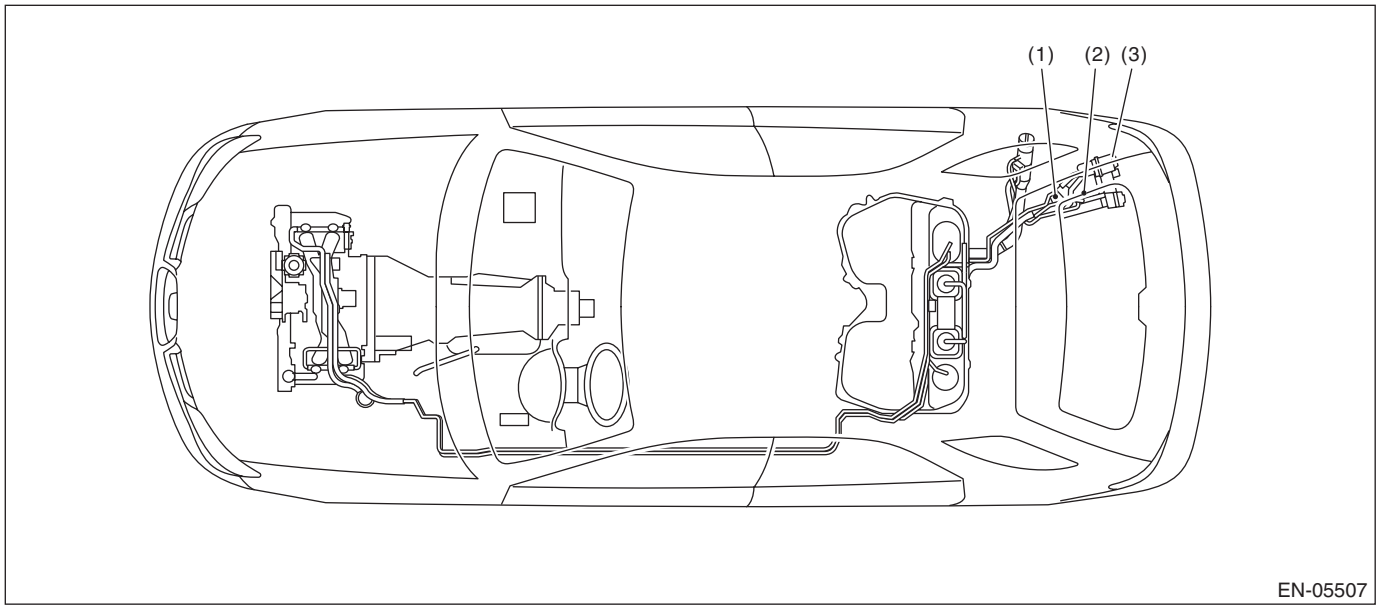

(1) Pressure control solenoid valve (2) Canister (3) Drain valve

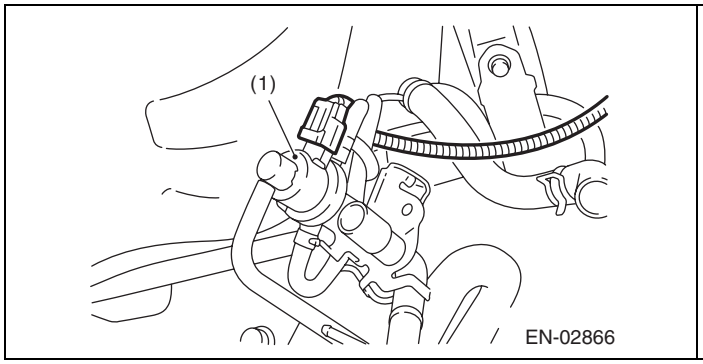

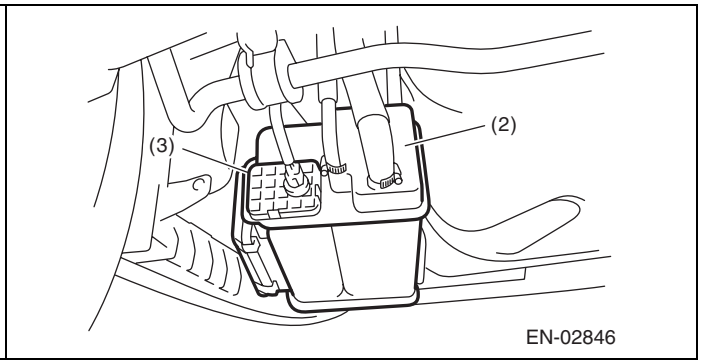

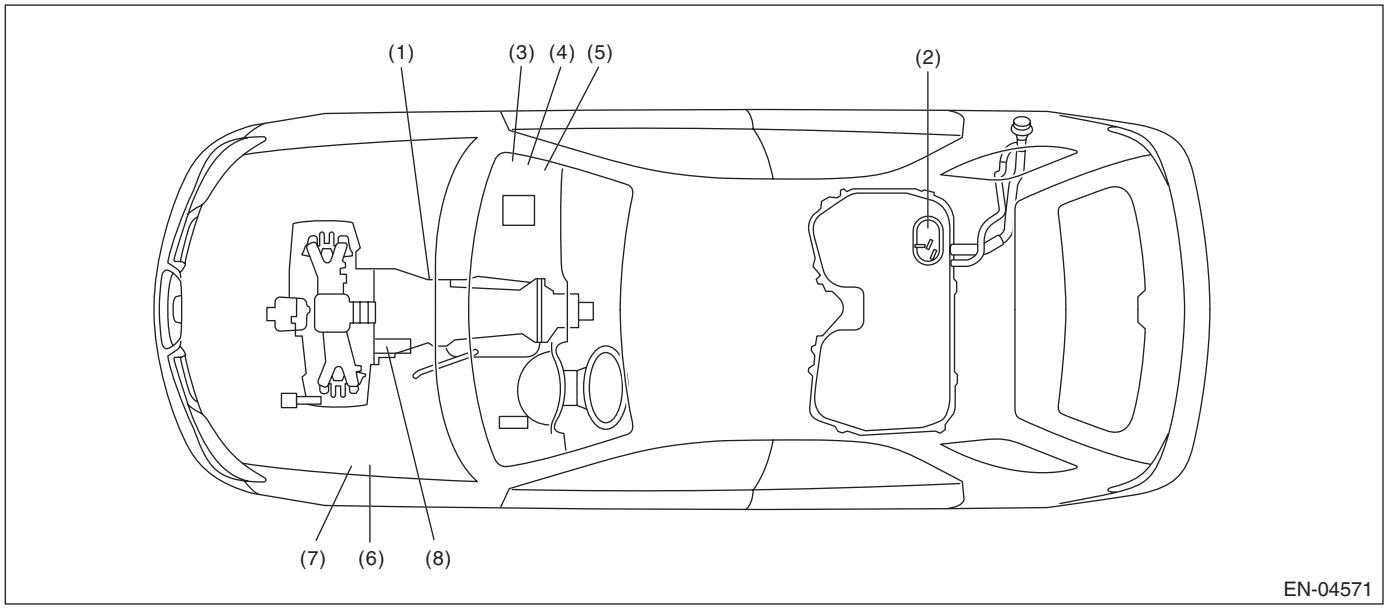

(1) Inhibitor switch
(2) Fuel pump
(3) Main relay
(4) Fuel pump relay
(5) Electronic throttle control relay
(6) Radiator main fan relay
(7) Radiator sub fan relay
(8) Starter

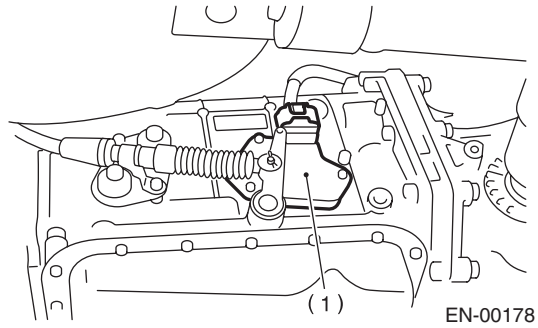

EN-00178

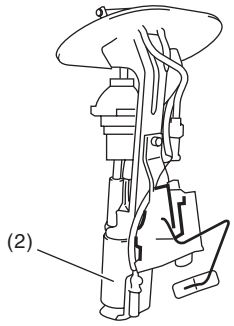

EN-04086

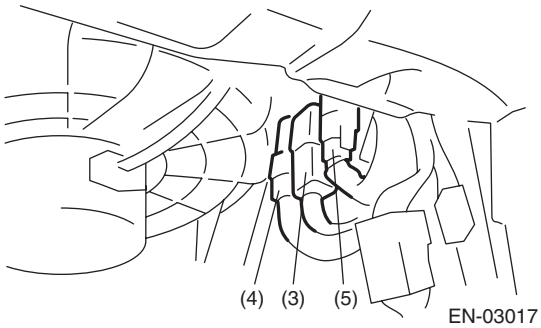

EN-03017

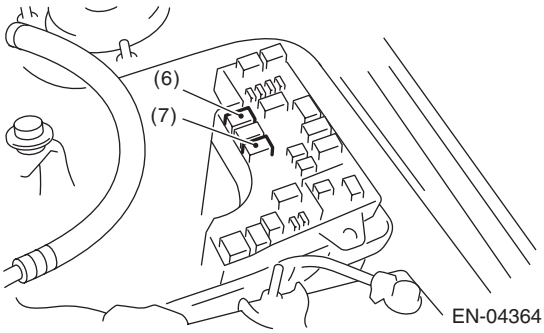

EN-04364

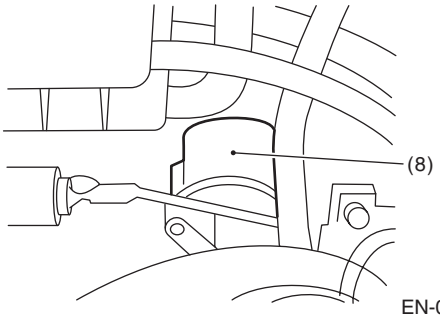

EN-04570